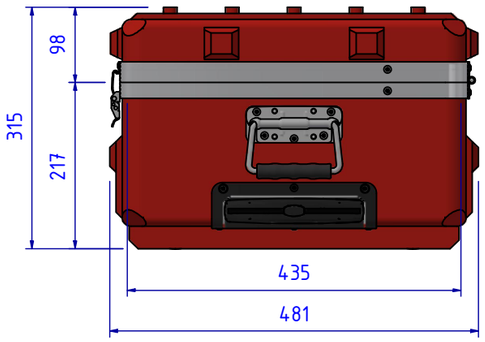

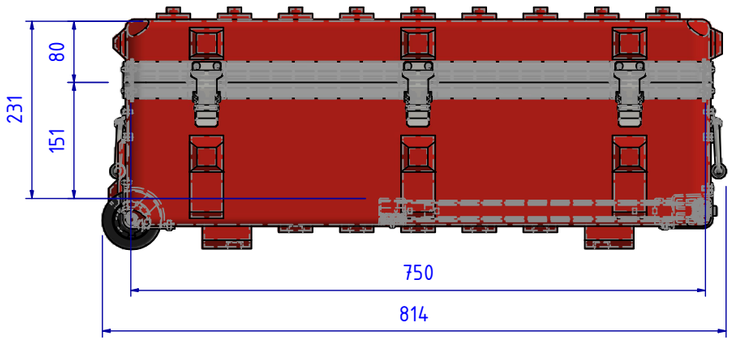

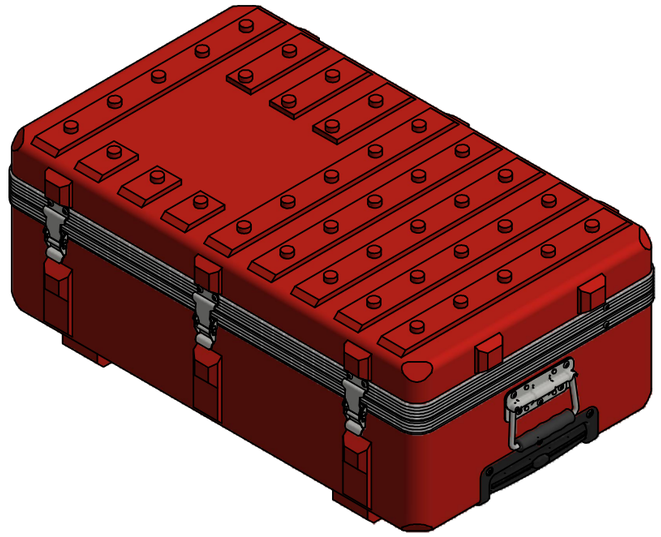

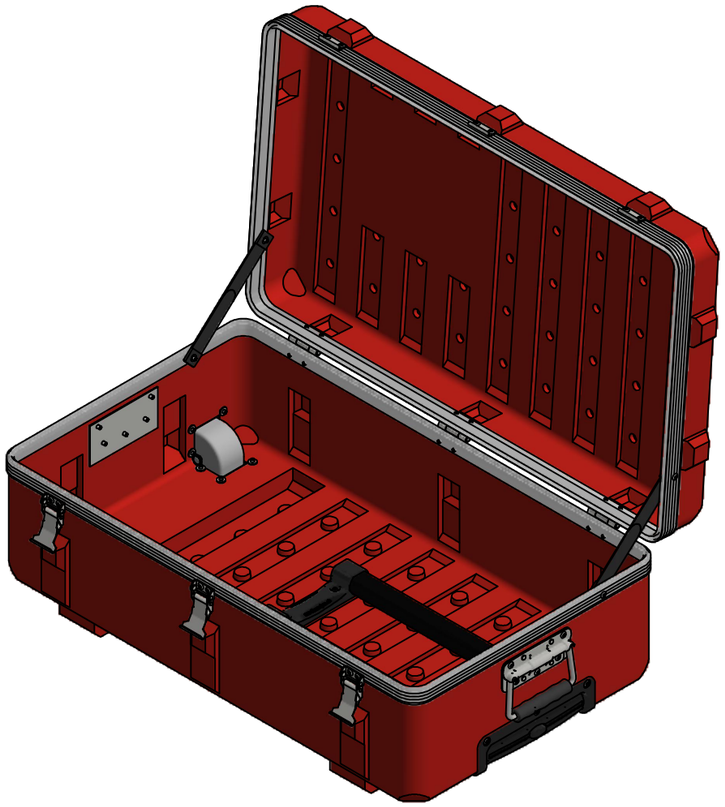

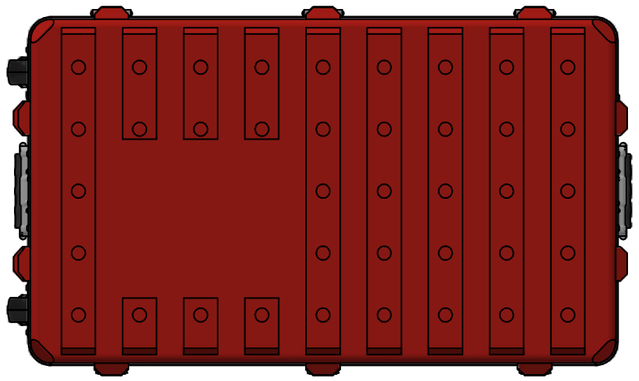

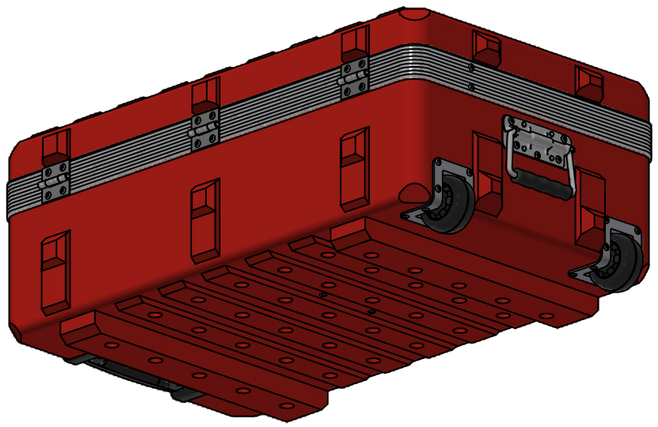

Nr.	Qty.	PN	Name
1	1	PDM-23668	Unterteil / base
2	1	PDM-23665	Deckel / lid
3	3	400012.1	Scharnier / hinge 400 012 (Edelstahl / stainless steel)
4	3	400128.1	Verschluss / catch 400 128 (Stahl verzinkt / steel zincked)
5	2	400010a.1	Aufhalteband / webbing lid stay 400 010a
6	2	400150.1	Rolle / wheel 400 150 (Zink / Zinc)
7	1	400404.1	Ausziehgriff / pull-out-handle 400 404
8	2	400120.1	Handgriff / handle 400 120 (Stahl verzinkt / steel zincked)

Thermodyne®
PACKAGING SOLUTIONS

Tolerance
according THE-Norm
www.thermodyne.de/
tolerances.pdf

814.00 x 481.00 x 315.00

Status	Changes	Date	Name
0.A	—		

	Date	Name
Drawer	09.07.2021	YNi
Reviewed		
Project owner		CBOE

Thermodyne GmbH
Nordstr. 15
D-49086 Osnabrück
www.thermodyne.de

Version: A

Thermodyne
80 48 - 230 - Trolley

8048-230tn

REV. 0

1 / 1

A3

Customer reference: 140009

© copyright and design right reserved by Thermodyne GmbH, D-49086 Osnabrueck. You are not allowed to forward this drawing or parts of it to a third party.